No	Code	Part Name	Qty	Material	Note
1	180321	FHSCS Screw M5x9	8	Standard	
2	320335	Pole plate	2	Mild steel	
3	8000436	40 mm magswitch	1	Sub-assm	
4	300415	Al side plate	2	T6061-T6	

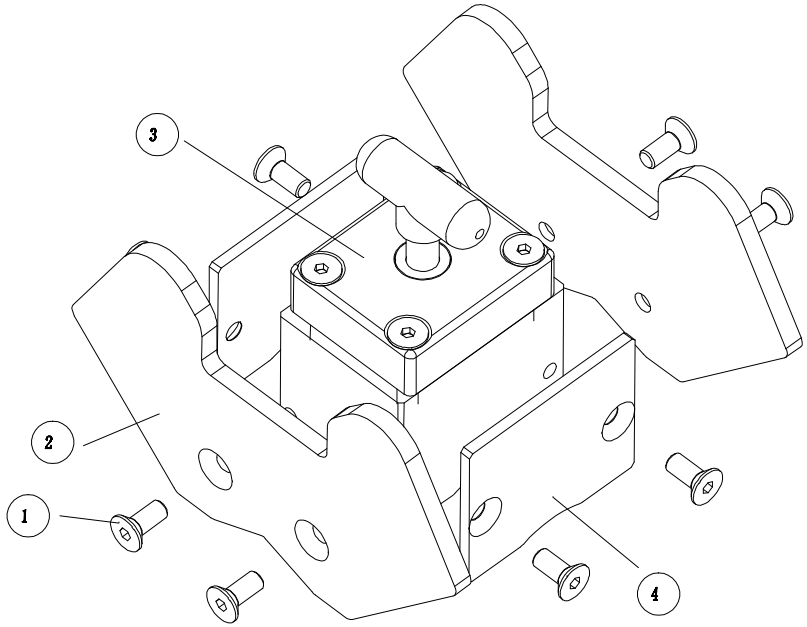

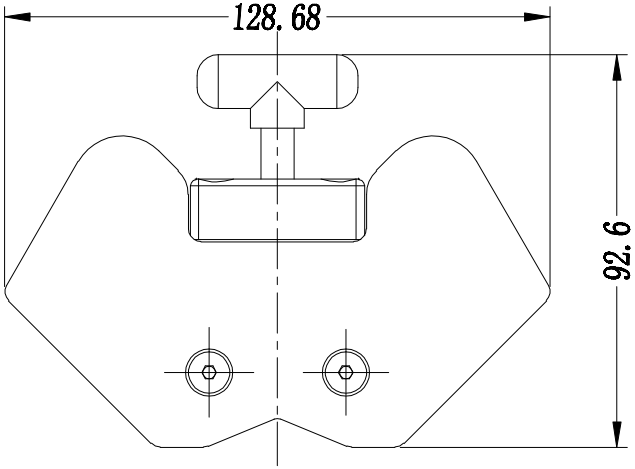

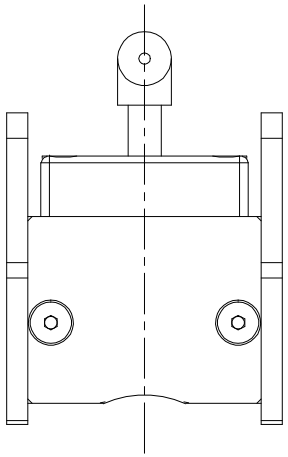

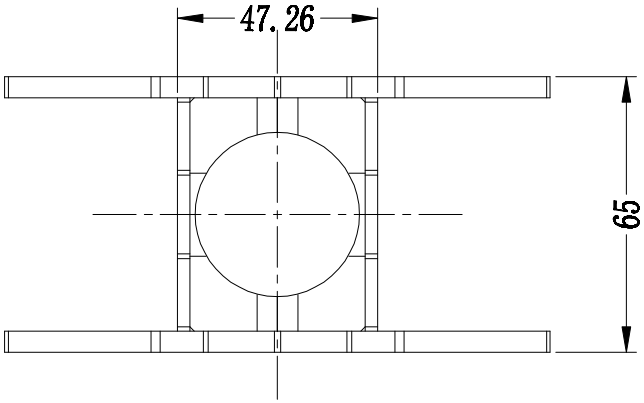

NOTES: UNLESS OTHERWISE SPECIFIED

1. INSPECT ⟨ST⟩ DIMENSIONS PER ISO 2768-M
2. 1° DRAFT ALLOWED FOR CASTING
3. REMOVE ALL BURRS AND BREAK SHARP EDGES.
4. IF CAST, TUMBLE DEBUR AFTER CASTING
5. FOR GENERAL DIMENSIONS NOT SPECIFIED SEE 3D CAD DATA
6. SURFACE ROUGHNESS

Surface Finish: N/A

MATERIAL: assembly

THIS DOCUMENT, AND THE INFORMATION IT CONTAINS, INCLUDING THE PRINCIPLES OF DESIGN, IS THE EXCLUSIVE PROPERTY OF MAGSWITCH TECHNOLOGY WORLDWIDE AND IS CONFIDENTIAL. ACCORDINGLY, THIS INFORMATION IS SUBMITTED TO YOU WITH THE AGREEMENT THAT IT IS NOT TO BE REPRODUCED, COPIED, OR LOANED IN PART OR IN WHOLE, NOR IS THE INFORMATION TO BE RELAYED TO ANY OTHER INDIVIDUAL OR COMPANY EXCEPT AS MTW FIRST AUTHORIZES IN WRITING. ACCEPTANCE OF THIS DOCUMENT CONSTITUTES AGREEMENT TO THESE RESTRICTIONS.

INTERPRET DRAWING PER: ISO 2768-M

DIMENSIONS ARE IN MILLIMETERS

THIRD ANGLE PROJECTION

DO NOT SCALE

DRAWN	Sam	DATE 2011-6-22
DESIGN	Sam	DATE 2011-6-22
STD. CHECK		DATE
F/F CHECK		DATE
APPROVED		DATE

magswitch
8774 YATES DRIVE, SUITE 140
WESTMINSTER, COLORADO 80031
303-466-0662 / FAX 303-951-0918

TITLE: 40 mm multi-angle Magswitch

SIZE	CAGE CODE	DWG. NO.	REV
B		8000438	1.0

SCALE 1:1 | WEIGHT: g | SHEET 1 OF 1